700T series
Slew drives

Innovative solutions for slew drives.
The slew drives of the 700T series provide the safest and most effective solution to all slew drive applications.
The 700T units have long been established in the cranes, excavators and special equipment industries, and today are highly appreciated by all the major manufacturers.

Torque Range
1000 ... 80000 Nm

Gear Ratios
3.4 ... 2000

Key Features
Flange mounted
Output shaft: splined or with integral pinion
Rugged construction
High torque capacity
Output shafts supported by heavy duty capacity bearings

Applicable motors
Cartridge axial piston hydraulic motors
Flanged axial piston hydraulic motors
Hydraulic orbit motors
IEC electric motors

Hydraulic motor options
Pressure relief valve
Overcenter valve

Hydraulic Brake
Hydraulically released parking brake on request

Electric Brake
DC and AC type

Type	Excavator Torque [Nm]
700 T1 F	1000
701 T1 F	1800
703 T2 F	2500
705 T2 F	5000
705 T2 L	5000
706 T2 N	7500
707 T2 N	9000
709 T2 N	12000
710 T2 N	18000
711 T2 C	20000
711 T2 F	20000
713 T3 N	40000
715 T3 N	70000

Type	Crane Torque [Nm]
700 T1 F	1200
701 T1 F	2400
703 T2 F	3500
705 T2 F	6500
705 T2 L	6500
706 T2 N	10000
707 T2 N	15000
709 T2 N	20000
710 T2 N	30000
711 T2 C	35000
713 T3 N	55000
715 T3 N	80000

Overall dimensions and technical data

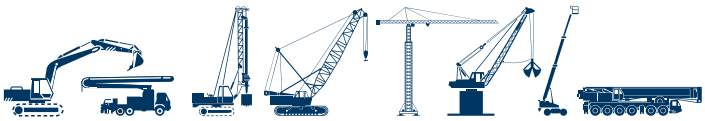

Type	Range of ratios	Max. input speed	Hydraulic motor drive	Braking torque	Min. opening pressure	Weight	Design
	1:	min -1	(1)	Nm	bar	Kg	
700 T1 F	3.48-7.2	500	LS	50 - 400	10 - 30	22	A
701 T1 F	3.48-7.2	500	LS	50 - 400	10 - 30	27	A
703 T2F	12-44	3000	HS	50 - 400	10 - 30	45	A
705 T2F	12-44	3000	HS	50 - 400	10 - 30	55	A
705 T2L	12-44	3000	HS	50 - 400	10 - 30	80	B
706 T2N	15-46	3000	HS	400 - 1000	20 - 30	95	B
707 T2N	17-47	3000	HS	400 - 1000	20 - 30	140	B
709 T2N	17-47	3000	HS	400 - 1000	20 - 30	165	B
710 T2 N	19-38	3000	HS	400 - 1000	20 - 30	250	B
711 T2C	14-39	3000	HS	400 - 1000	20 - 30	300	B
713 T3N	50-300	3000	HS	400 - 1000	20 - 30	500	B
715 T3N	57-250	3000	HS	400 - 1000	20 - 30	650	B
711 T2F	14-39	3000	HS	400 - 1000	20 - 30	160	A

(1) LS = Low speed motor
HS = High speed motor

Design A

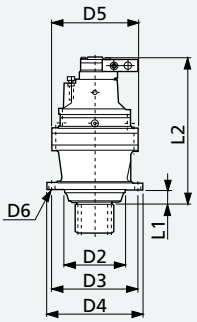

Design B

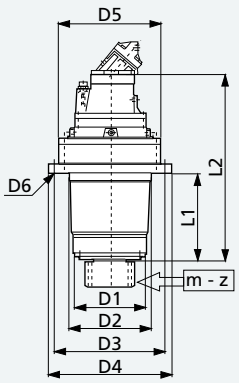

Type	D1	D2	D3	D4	D5	D6	L1	L2	m z
700 T1 F	–	150	195	220	186	12.5	31	300	Module / number of teeth of pinion UPON REQUEST
701 T1 F	–	150	195	220	186	12.5	31	325	
703 T2F	–	175	245	272	245	18	41	410	
705 T2F	–	175	245	272	245	18	41	440	
705 T2L	180	195	245	290	245	13	171	470	
706 T2N	200	250	325	360	292	17	225	560	
707 T2N	230	280	314	348	345	17	295	670	
709 T2N	250	280	380	420	345	17	295	720	
710 T2 N	300	425	460	500	400	22	360	730	
711 T2C	300	425	460	500	428	22	345	735	
713 T3N	340	400	510	560	445	22	420	1030	
715 T3N	370	470	600	640	542	22	465	1250	
711 T2F	500	320	500	560	425	22	70	750	

700TK series
Slew drives

Slew drives for excavator duty.
The 700TK series is the compact and yet powerful package for the slew drive of excavators up to approx. 20 ton class.
The units are powered by integrated axial piston hydraulic motors, developed in cooperation with KAYABA and can be accommodated within the smallest space.
Wide choice of drive pinions, standard or to customer specs.

Torque Range
750 ... 9000 Nm

Excavator weight
1.5 to 20 ton.

Gear Ratios
7 ... 40

Key Features
Flange mounted
Output shaft with integral pinion
Rugged construction
High torque capacity
Output shafts supported by heavy duty bearings
Compact design

Hydraulic motors
KAYABA hydraulic motor fixed displacement complete with shockless type pressure relief valve

Motor options
Anti swing-back valve

Brake
Hydraulically released failsafe parking brake
Brake retarder valve on request

Type	Torque [Nm]
700 T1 K-27	750
701 T2 K-27	1200
703 T2 K-27	2000
705 T2 K-44	4000
706 T2 K-63	6000
706 T2 K-85	7000
707 T2 K-85	9000

Overall dimensions and technical data

Type	Motor displacement	Max. pressure	Max. flow	Parking brake		Range of ratio	Approx. weight of machine
	cm	bar	l/min	Yes	No	1:	ton
700 T1 K - 27	27.4	210	18	•	•	8.2	1.5 - 2.5
701 T2 K - 27	27.4	210	30	•	•	13.7-20.8	3 - 4
703 T2 K - 27	27.4	250	50	•	•	14.8-35.6	5 - 6
705 T2 K - 44	44.1	280	80	•		18-26.3	7 - 8
706 T2 K - 63	62.9	280	120	•		15.3-33	9 - 10
706 T2 K - 85	87.3	320	160	•		15.3-22.6	11 - 13
707 T2 K - 85	87.3	320	160	•		14.7-22.3	15 - 18

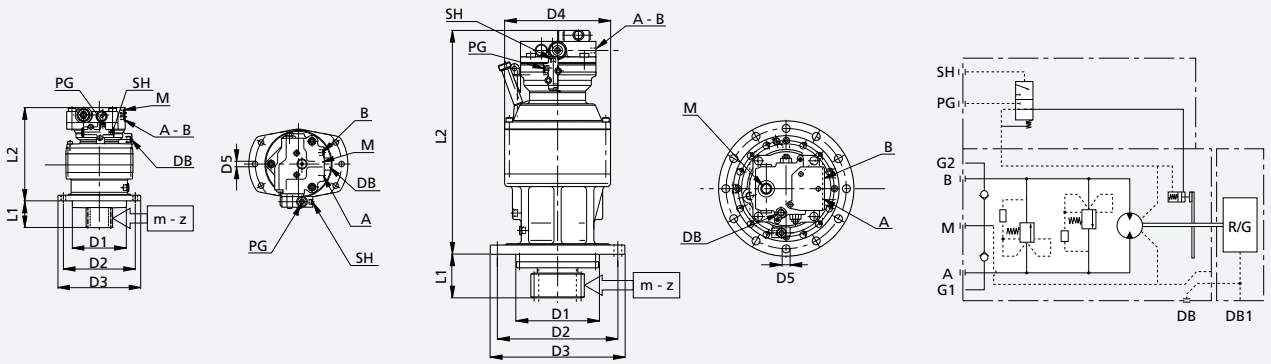

Type	D1	D2	D3	D4	D5	L1	L2	A-B	DB	M	SH	PG	m z
700 T1 K - 27	–	228	260	186	ø 13 n°6	76	221	MAIN PORT	DRAIN PORT	ANTICAVITATION PORT	SPOOL OPERATING PORT	BRAKE RELEASE PORT	Module / number of teeth of pinion UPON REQUEST
701 T2 K - 27	175	228	260	186	ø 13 n°6	86	256						
703 T2 K - 27	175	245	272	244	ø 18 n°10	120	330						
705 T2 K - 44	230	245	272	244	ø 18 n°10	120	420						
706 T2 K - 63	230	332	372	292	ø 22 n°10	150	580						
706 T2 K - 85	270	332	372	292	ø 22 n°10	150	615						
707 T2 K - 85	–	360	410	348	ø 22 n°12	160	580						